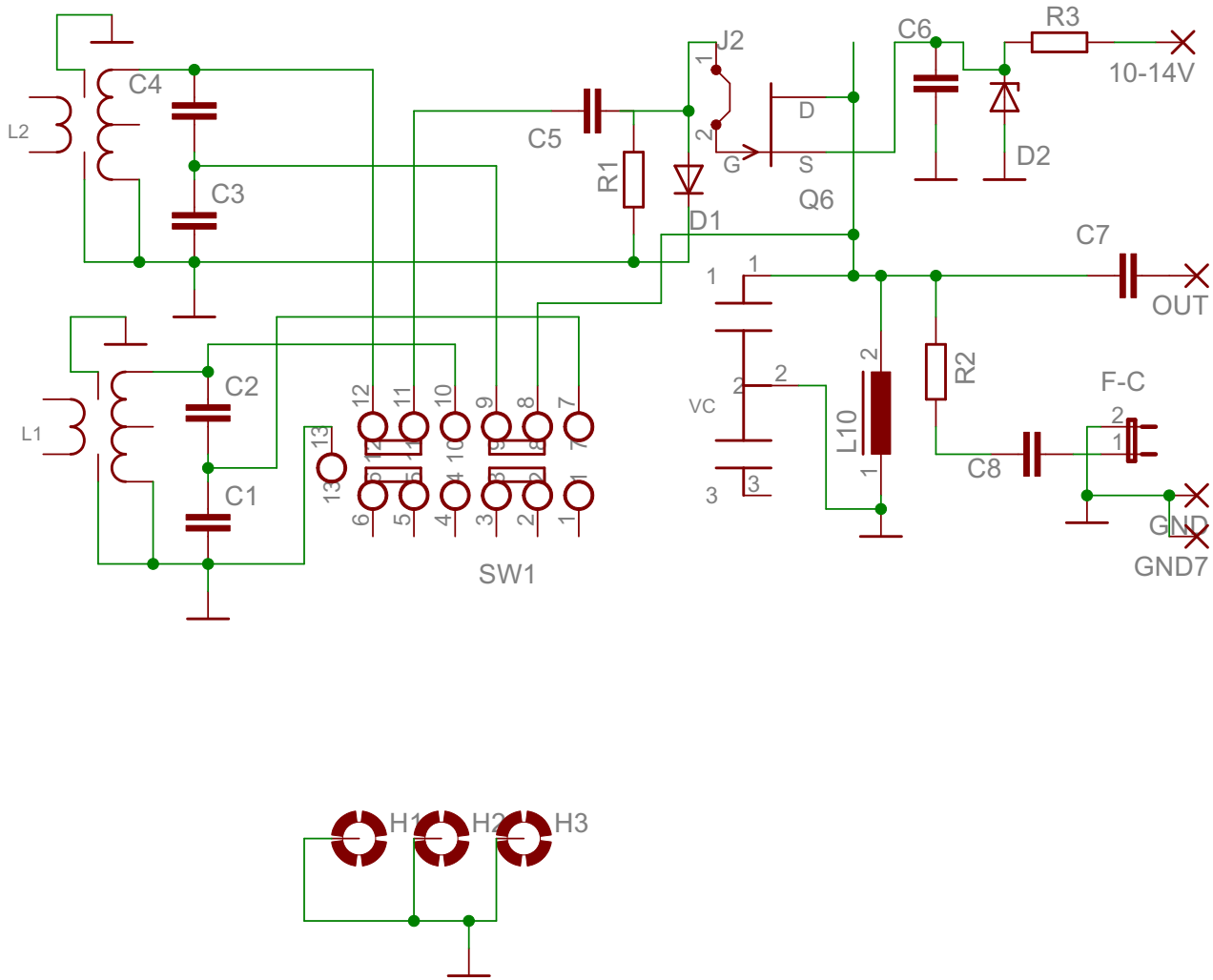
L2
C4
C3
L1
C2
C1
C5
R1
D1
J2
G
D
S
Q6
C6
R3
10-14V
D2
C7
OUT
VC
L10
R2
C8
F-C
GND
GND7
SW1
H1
H2
H3